EAGLE
PAN TILT SYSTEMS
Helping to bring your world into focus

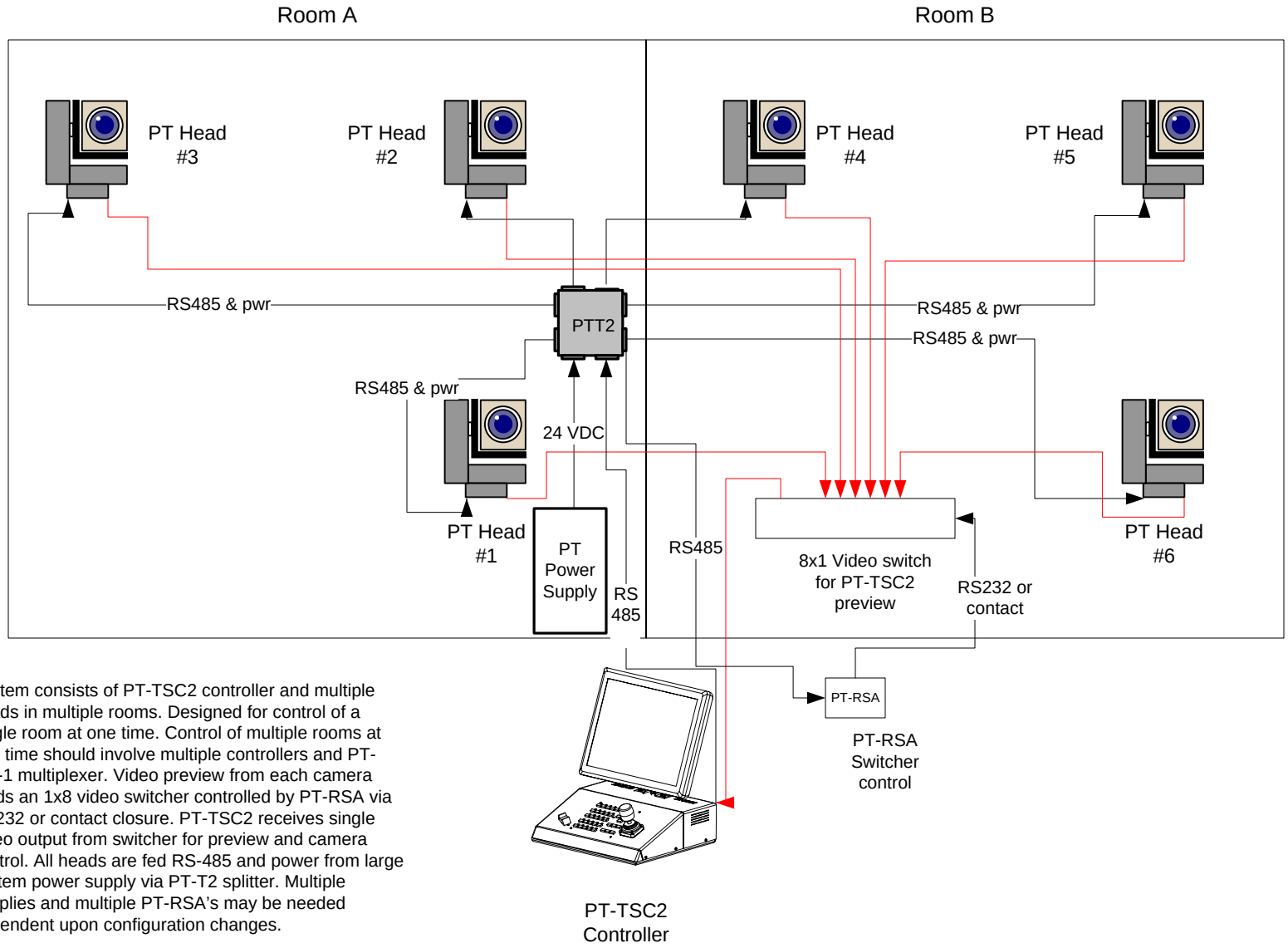

System consists of PT-TSC2 controller and multiple heads in multiple rooms. Designed for control of a single room at one time. Control of multiple rooms at one time should involve multiple controllers and PT-MP-1 multiplexer. Video preview from each camera feeds an 1x8 video switcher controlled by PT-RSA via RS232 or contact closure. PT-TSC2 receives single video output from switcher for preview and camera control. All heads are fed RS-485 and power from large system power supply via PT-T2 splitter. Multiple supplies and multiple PT-RSA's may be needed dependent upon configuration changes.